Report of
“Innovative Assignment”
For
2CS507CC23

Digital Electronics

B. Tech. Semester III

Report Prepared By
Keval Dholakia 23BCE066
Gautam Kondhia 23BCE080

School of Technology
Institute of Technology
Nirma University
Ahmedabad 382481

INDEX

Sr No.	Description	Page No.
1	About the Project	3
2	Inputs to BCD	4
3	BCD to Output	11
4	Logisim Implementation	18
5	Acknowledgment	24
6	Conclusion	25

About the Project

We have designed an advanced Universal Code Converter, capable of transforming any 4-bit input into a range of commonly used coding formats, including Excess-3, 84-2-1, Gray, and Binary Coded Decimal (BCD).

Procedure

Step 1: Converting Inputs to BCD

1) Gray to BCD
   i) Truth Table

Decimal	Input (Gray)				Output(BCD)			
	I4	I3	I2	I1	B1	B2	B3	B4
0	0	0	0	0	0	0	0	0
1	0	0	0	1	0	0	0	1
2	0	0	1	1	0	0	1	0
3	0	0	1	0	0	0	1	1
4	0	1	1	0	0	1	0	0
5	0	1	1	1	0	1	0	1
6	0	1	0	1	0	1	1	0
7	0	1	0	0	0	1	1	1
8	1	1	0	0	1	0	0	0

9	1	1	0	1	1	0	0	1

ii) Karnaugh Map (Kmap)

B1	0 0	0 1	1 1	1 0
0 0	0	0	0	0
0 1	0	0	0	0
1 1	X	X	X	X
1 0	1	1	X	X

B2	0 0	0 1	1 1	1 0
0 0	0	0	0	0
0 1	1	1	1	1
1 1	X	X	X	X
1 0	0	0	X	X

B3	0 0	0 1	1 1	1 0
0 0	0	0	1	1
0 1	0	0	1	1
1 1	X	X	X	X
1 0	0	0	X	X

B4	0 0	0 1	1 1	1 0
0 0	0	1	1	0
0 1	0	1	1	0
1 1	X	X	X	X
1 0	0	1	X	X

2) Excess-3 to BCD

i. Truth Table

Decimal	Input (EX-3)				Output(BCD)			
	I4	I3	I2	I1	B1	B2	B3	B4
0	0	0	1	1	0	0	0	0
1	0	1	0	0	0	0	0	1
2	0	1	0	1	0	0	1	0
3	0	1	1	0	0	0	1	1
4	0	1	1	1	0	1	0	0
5	1	0	0	0	0	1	0	1
6	1	0	0	1	0	1	1	0
7	1	0	1	0	0	1	1	1
8	1	0	1	1	1	0	0	0
9	1	1	0	0	1	0	0	1

ii. K maps

B1	0 0	0 1	1 1	1 0
0 0	X	X	0	X
0 1	1	0	0	1
1 1	1	X	X	X
1 0	1	0	0	1

B2	0 0	0 1	1 1	1 0
0 0	X	X	0	X
0 1	0	1	0	1
1 1	0	X	X	X
1 0	0	1	0	1

B3	0 0	0 1	1 1	1 0
0 0	X	X	0	X
0 1	0	0	1	0
1 1	0	X	X	X
1 0	1	1	0	1

B4	0 0	0 1	1 1	1 0
0 0	X	X	0	X
0 1	0	0	0	0
1 1	1	X	X	X

1 0	0	0	1	0

3) 84-2-1 to BCD

i. Truth Table

Decimal	Input (84-2-1)				Output(BCD)			
	I4	I3	I2	I1	B1	B2	B3	B4
0	0	0	0	0	0	0	0	0
1	0	1	1	1	0	0	0	1
2	0	1	1	0	0	0	1	0
3	0	1	0	1	0	0	1	1
4	0	1	0	0	0	1	0	0
5	1	0	1	1	0	1	0	1
6	1	0	1	0	0	1	1	0
7	1	0	0	1	0	1	1	1
8	1	0	0	0	1	0	0	0
9	1	1	1	1	1	0	0	1

ii. K maps

B1	0 0	0 1	1 1	1 0
0 0	0	X	X	X
0 1	0	1	1	0
1 1	X	X	1	X
1 0	0	1	1	0

B2	0 0	0 1	1 1	1 0
0 0	0	X	X	X
0 1	0	1	0	1
1 1	X	X	0	X
1 0	0	1	0	1

B3	0 0	0 1	1 1	1 0
0 0	0	X	X	X
0 1	1	0	0	0
1 1	X	X	0	X
1 0	0	1	1	1

B4	0 0	0 1	1 1	1 0
0 0	0	X	X	X
0 1	0	0	0	0
1 1	X	X	1	X

1 0	1	0	0	0

Final Equation

	BCD	GRAY	EX-3	84-2-1
B4	I4	I4	I3I4+I4I2I1	I3I4 + I4I2`I1`
B3	I3	I4⊕I3	I1I2I3 + I1I2`I4 + I1`I3`I4	I1`I2`I3 + I3`I1 + I3`I2
B2	I2	I4⊕I3⊕I2	I1 ⊕ I2	I1 ⊕ I2
B1	I1	I4⊕I3⊕I2⊕I1	I1`	I1

Step 2: Converting BCD to Output

1. BCD to Gray
   i. Truth Table

Decimal	Input (BCD)				Output(Gray)			
	B4	B3	B2	B1	O1	O2	O3	O4
0	0	0	0	0	0	0	0	0
1	0	0	0	1	0	0	0	1
2	0	0	1	0	0	0	1	1
3	0	0	1	1	0	0	1	0
4	0	1	0	0	0	1	1	0
5	0	1	0	1	0	1	1	1
6	0	1	1	0	0	1	0	1
7	0	1	1	1	0	1	0	0
8	1	0	0	0	1	1	0	0

9	1	0	0	1	1	1	0	1

ii. K maps

O1	0 0	0 1	1 1	1 0
0 0	0	1	0	1
0 1	0	1	0	1
1 1	X	X	X	X
1 0	0	1	X	X

O2	0 0	0 1	1 1	1 0
0 0	0	0	1	1
0 1	1	1	0	0
1 1	X	X	X	X
1 0	0	0	X	X

O3	0 0	0 1	1 1	1 0
0 0	0	0	0	0
0 1	1	1	1	1
1 1	X	X	X	X
1 0	1	1	X	X

2. BCD to Gray

i. Truth Table

Decimal	Input (BCD)				Output(EX-3)			
	B4	B3	B2	B1	O1	O2	O3	O4
0	0	0	0	0	0	0	1	1
1	0	0	0	1	0	1	0	0
2	0	0	1	0	0	1	0	1
3	0	0	1	1	0	1	1	0
4	0	1	0	0	0	1	1	1
5	0	1	0	1	1	0	0	0
6	0	1	1	0	1	0	0	1
7	0	1	1	1	1	0	1	0
8	1	0	0	0	1	0	1	1
9	1	0	0	1	1	1	0	0

ii. K maps

O1	0 0	0 1	1 1	1 0
0 0	1	0	0	1
0 1	1	0	0	1
1 1	X	X	X	X
1 0	1	0	X	X

O2	0 0	0 1	1 1	1 0
0 0	1	0	1	0
0 1	1	0	1	0
1 1	X	X	X	X
1 0	1	0	X	X

O3	0 0	0 1	1 1	1 0
0 0	0	1	1	1
0 1	1	0	0	0
1 1	X	X	X	X
1 0	0	1	X	X

O4	0 0	0 1	1 1	1 0
0 0	0	0	0	0
0 1	0	1	1	1
1 1	X	X	X	X

1 0	1	1	X	X

3. BCD to 84-2-1

i. Truth Table

Decimal	Input (BCD)				Output(84-2-1)			
	B4	B3	B2	B1	O1	O2	O3	O4
0	0	0	0	0	0	0	0	0
1	0	0	0	1	0	1	1	1
2	0	0	1	0	0	1	1	0
3	0	0	1	1	0	1	0	1
4	0	1	0	0	0	1	0	0
5	0	1	0	1	1	0	1	1
6	0	1	1	0	1	0	1	0
7	0	1	1	1	1	0	0	1
8	1	0	0	0	1	0	0	0
9	1	0	0	1	1	1	1	1

ii. K maps

O1	0 0	0 1	1 1	1 0
0 0	0	1	1	0
0 1	0	1	1	0
1 1	X	X	X	X
1 0	0	1	X	X

O2	0 0	0 1	1 1	1 0
0 0	0	1	0	1
0 1	0	1	0	1
1 1	X	X	X	X
1 0	0	1	X	X

O3	0 0	0 1	1 1	1 0
0 0	0	1	1	1
0 1	1	0	0	0
1 1	X	X	X	X
1 0	0	1	X	X

O4	0 0	0 1	1 1	1 0
0 0	0	0	0	0
0 1	0	1	1	1

1 1	X	X	X	X
1 0	1	1	X	X

Final Equation

	BCD	GRAY	EX-3	84-2-1
O4	B4	B4	B4+B3B1+B3B2	B4+B3B1+B3B2
O3	B3	B3+B4	B1`B2`B3 + B3`B1 + B3`B2	B1`B2`B3 + B3`B1 + B3`B2
O2	B2	B2⊕B3	B2⊙B1	B1 ⊕ B2
O1	B1	B1⊕B2	B1`	B1
	S2` S1` 0 0	S2` S1 0 1	S2 S1` 1 0	S2 S1 1 1

Step 3: Logisim Implementation

i. Inputs to BCD

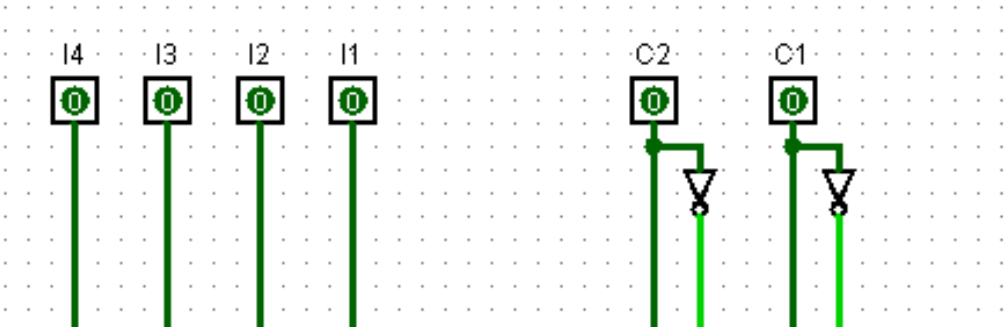

C2 and C1 are the selection lines which let user to decide the format of the input.

C2’ C1’	BCD
C2` C1	Gray
C2 C1`	EX-3
C2 C1	84-2-1

I4, I3, I2 and I1 are the input bits which is the input which is to be converted to desired format.

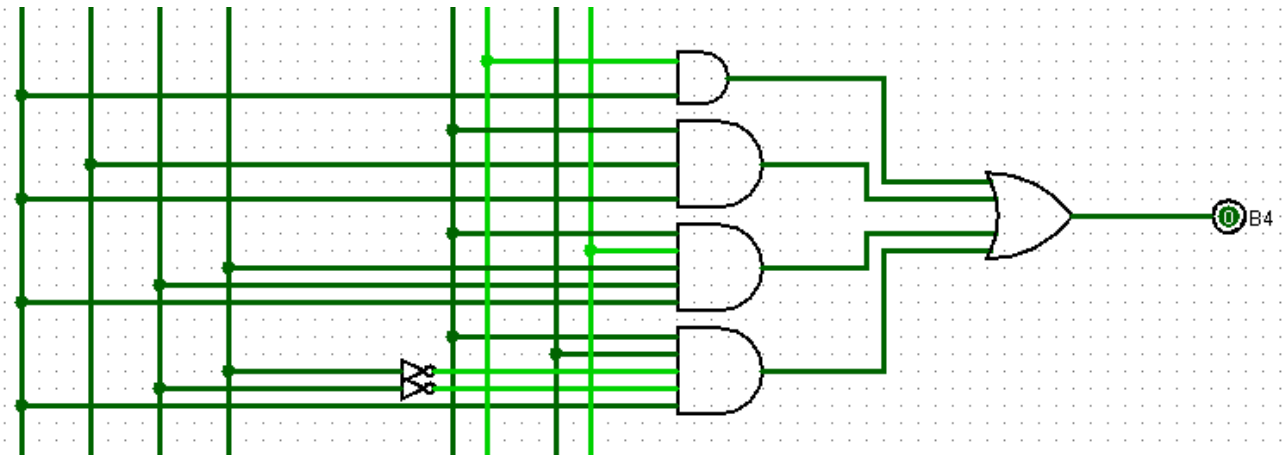

B4 = C2`.C1`.I4 + C2`.C1.I4 + C2.C1`.(I3.I4 + I4.I2.I1) + C2.C1(I3.I4 + I4.I2`.I1`)

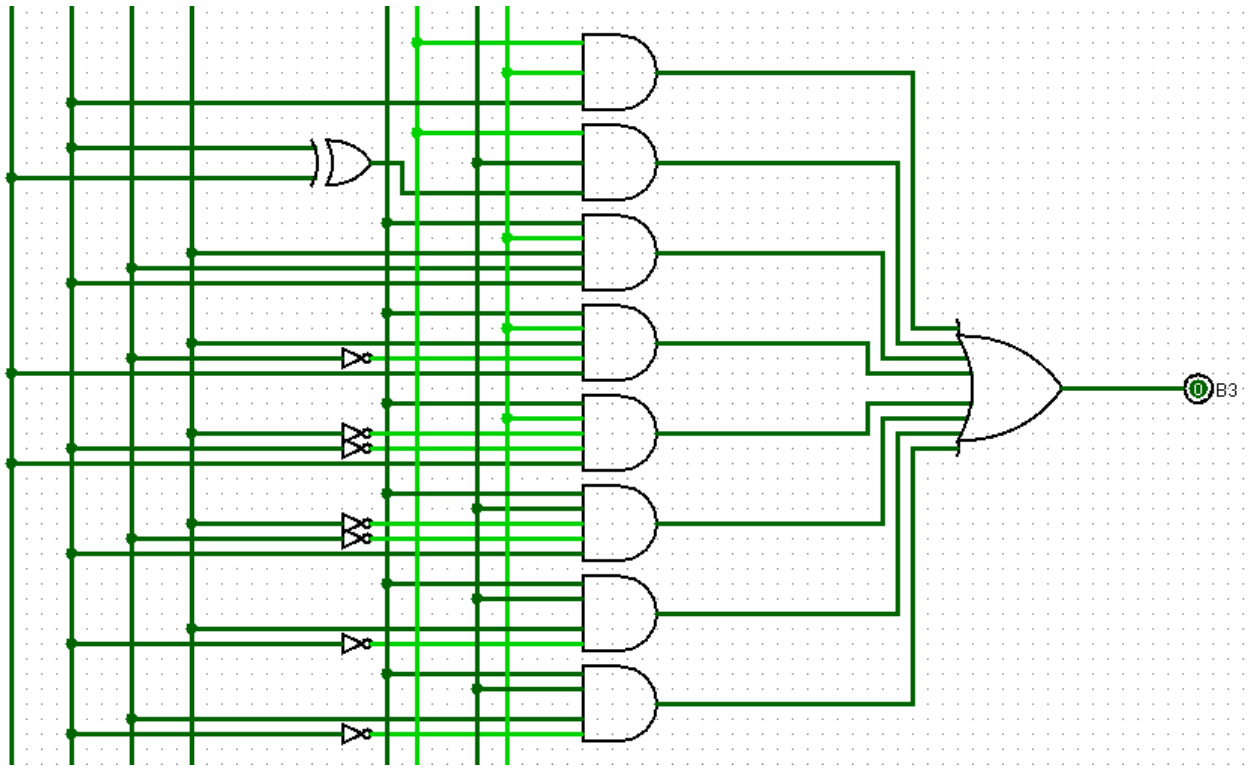

B3 = C2`.C1`.I3 + C2`.C1(I4⊕I3) + C2.C1`(I1.I2.I3 + I1.I2`.I4 + I1`.I3`.I4) + C2.C1(I1`.I2`.I3 + I3`.I1 + I3`.I2)

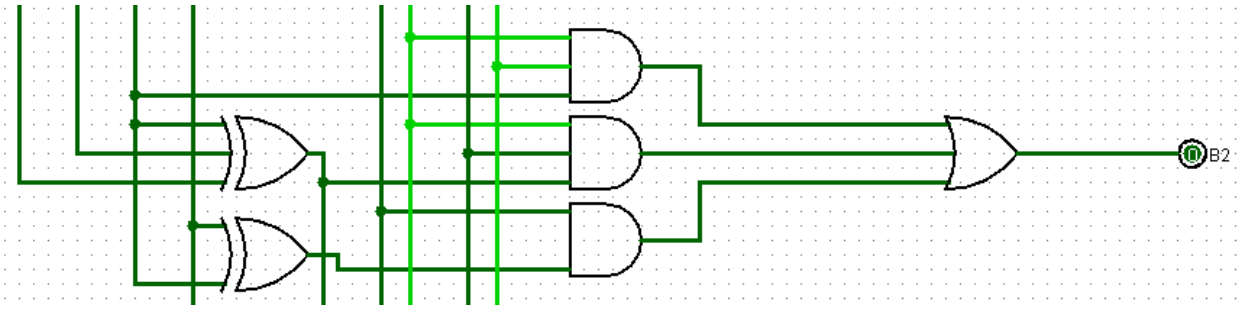

$B2 = C2`.C1`.I2 + C2`.C1(I4 \oplus I3 \oplus I2) + C2.C1`(I1 \oplus I2) + C2.C1(I1 \oplus I2)$

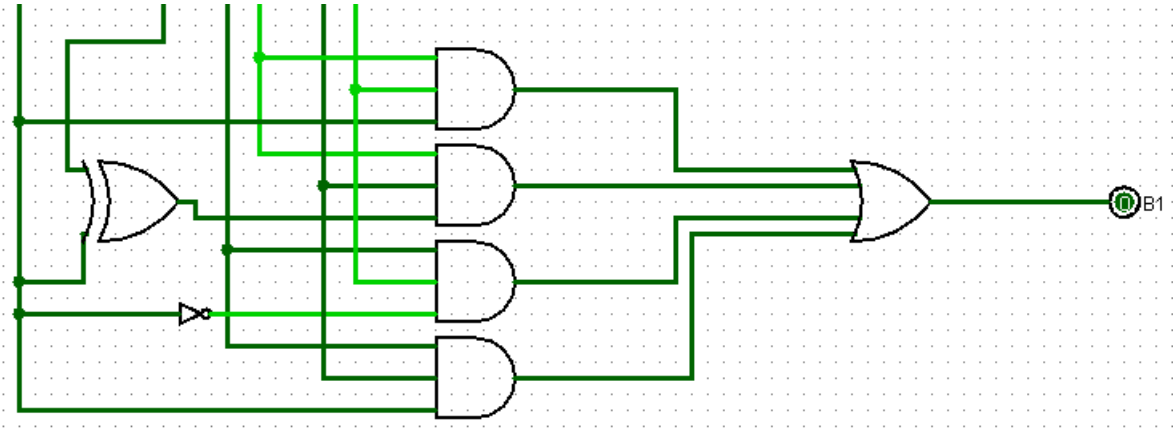

$B1 = C2`.C1`.I1 + C2`.C1(I4 \oplus I3 \oplus I2 \oplus I1) + C2.C1`.I1` + C2.C1.I1$

ii. BCD to Output

S1 and S2 are the selection lines which let user decide the format of the output

S2` S1`	BCD
S2` S1	Gray
S2 S1`	EX-3
S2 S1	84-2-1

B1, B2, B3 and B4 are the 4 BCD bits which is to be converted to the desired output.

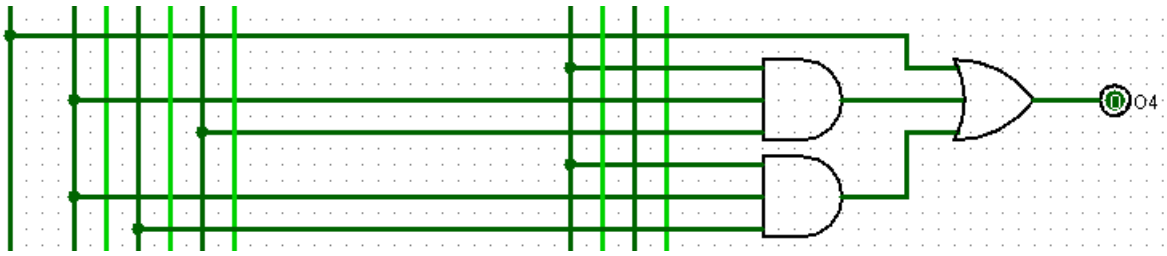

$$O4 = S2`.B4 + S2.(B4+B3.B1+B3.B2)$$

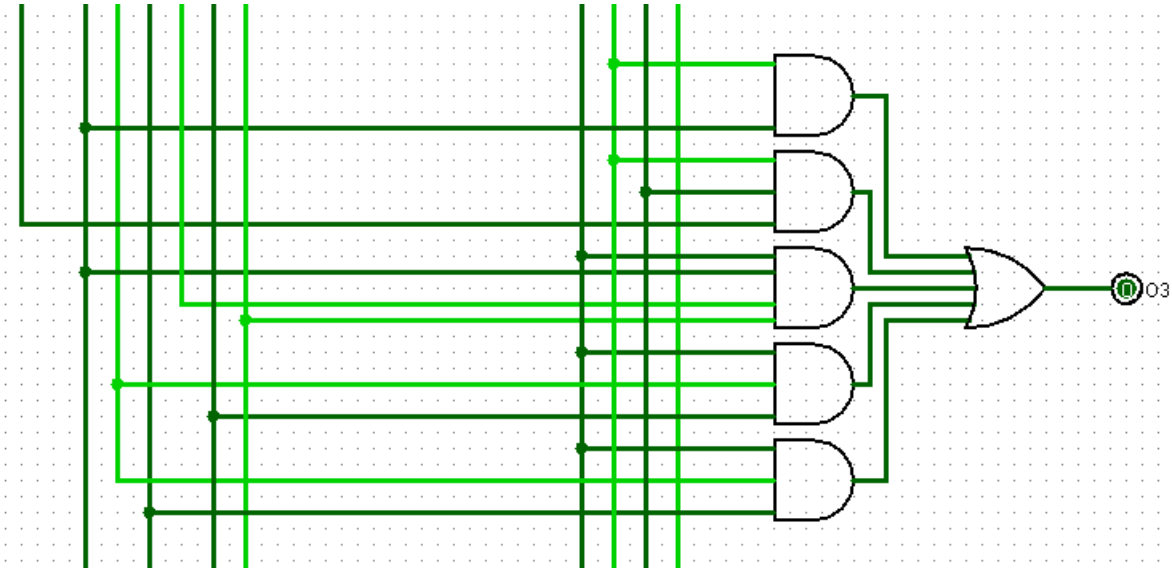

$$O3= S2`.S1`.B3 + S2`.S1(B3+B4) + S2(B1`.B2`.B3 + B3`.B1 + B3`.B2)$$

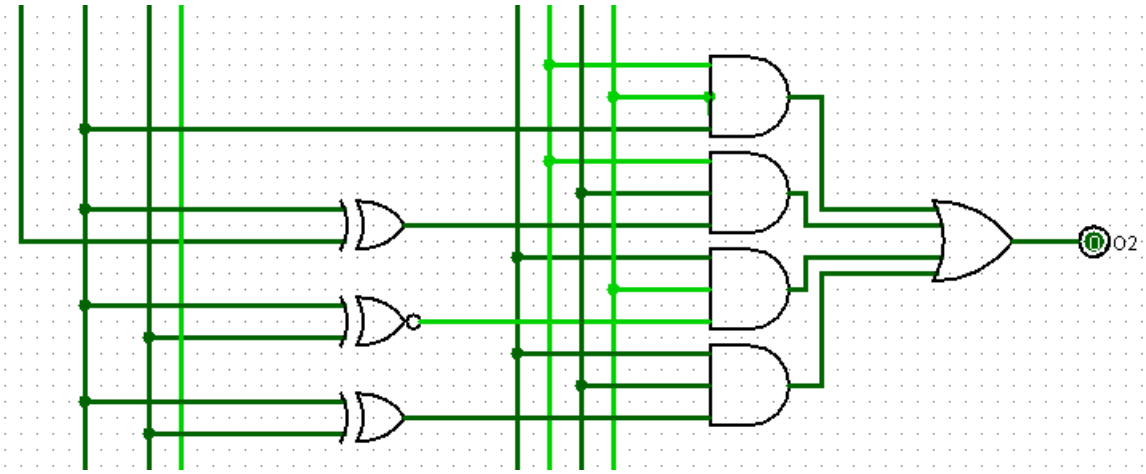

$O2 = S2`.S1`.B2 + S2`.S1.(B2 \oplus B3) + S2.S1`(B2 \odot B1) + S2.S1(B1 \oplus B2)$

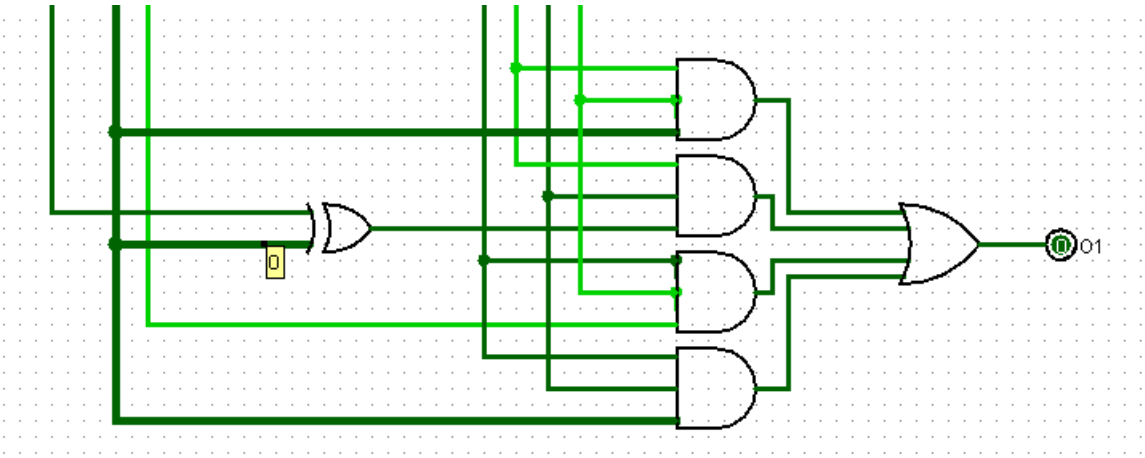

$O1 = S2`.S1`.B1 + S2`.S1`(B1 \oplus B2) + S2.S1.B1` + S2.S1.B1$

iii. Final Circuit

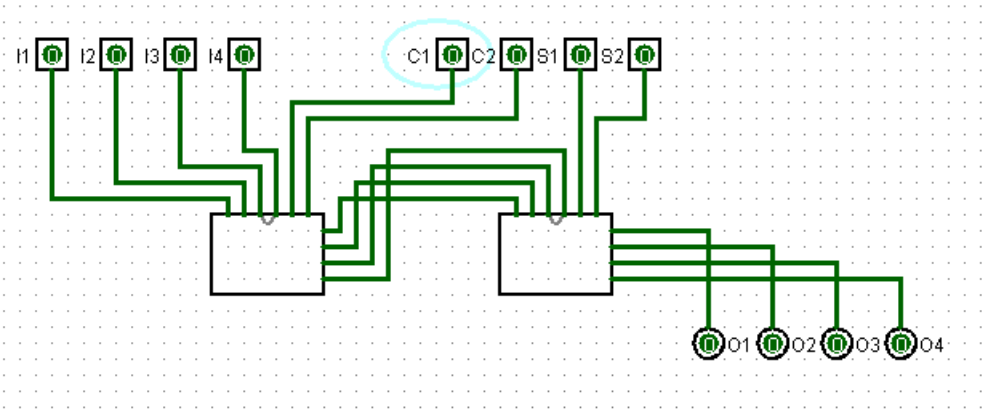

Acknowledgment

We would like to express our sincere gratitude to everyonce who supported us and contributed to the successful completion of this project, “Universal Code Convertor”.

Firstly, we would like to thank our professor Mrs. Sharada Valiveti for her invaluable knowledge and encouragement for this project. Her teachings on fundamental of Digital Electronics and different code types helped us tremendously during this project.

This project has been an enlightening experience and we are thankful to all who supported directly or indirectly for the success of this project.

Conclusion

The "Universal Code Converter" project successfully demonstrates the design and implementation of a versatile digital system capable of converting any 4-bit input into multiple coded outputs, including Excess-3, 84-2-1, Gray, and Binary Coded Decimal (BCD). By addressing the need for efficient code conversion across digital systems, this converter simplifies the process of translating binary data into various formats, which is essential for compatibility in numerous applications.